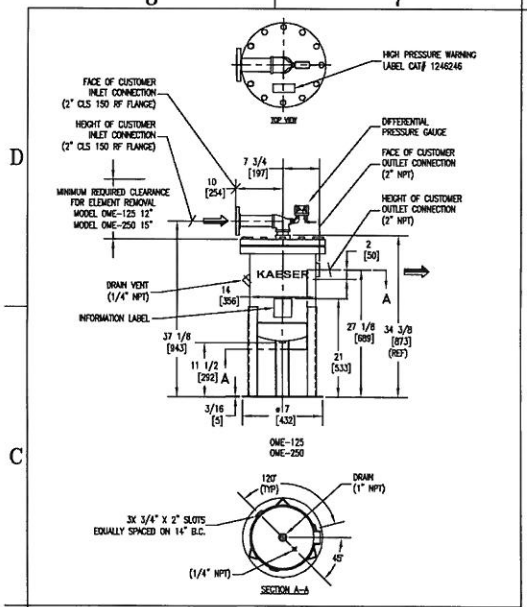

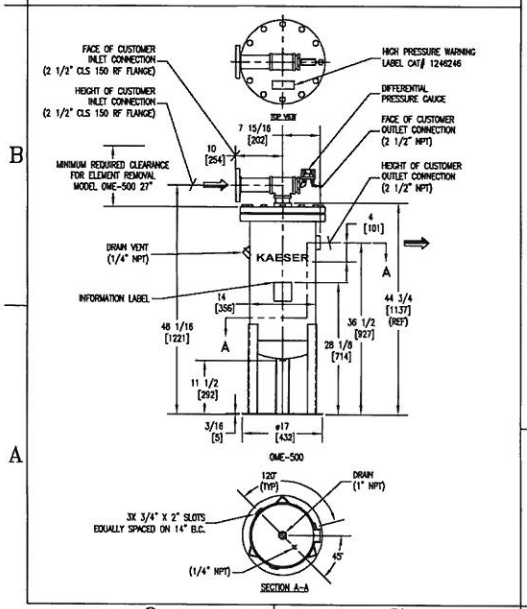

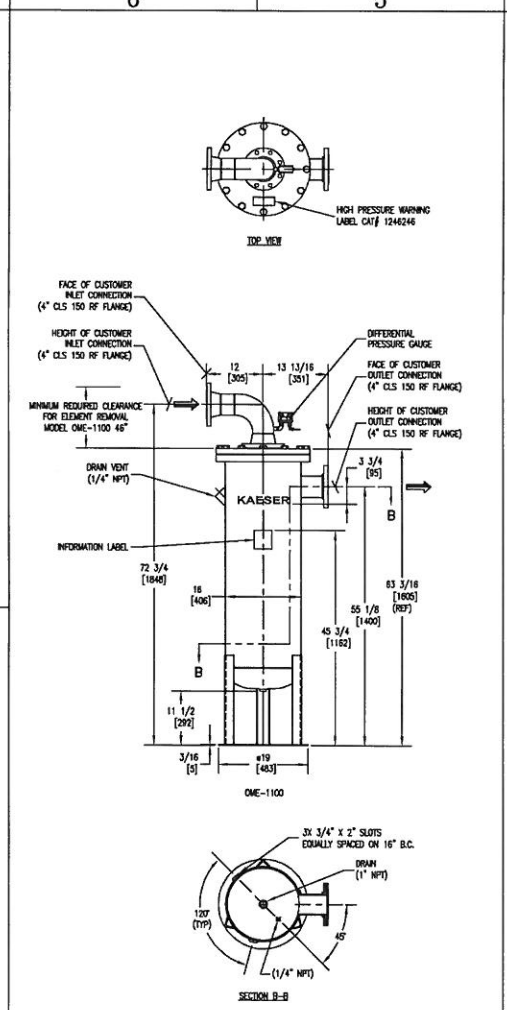

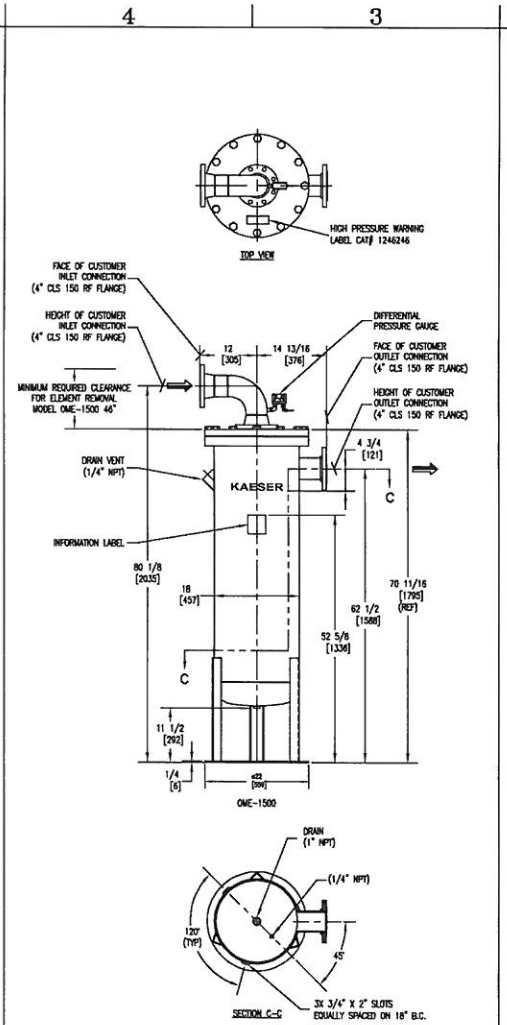

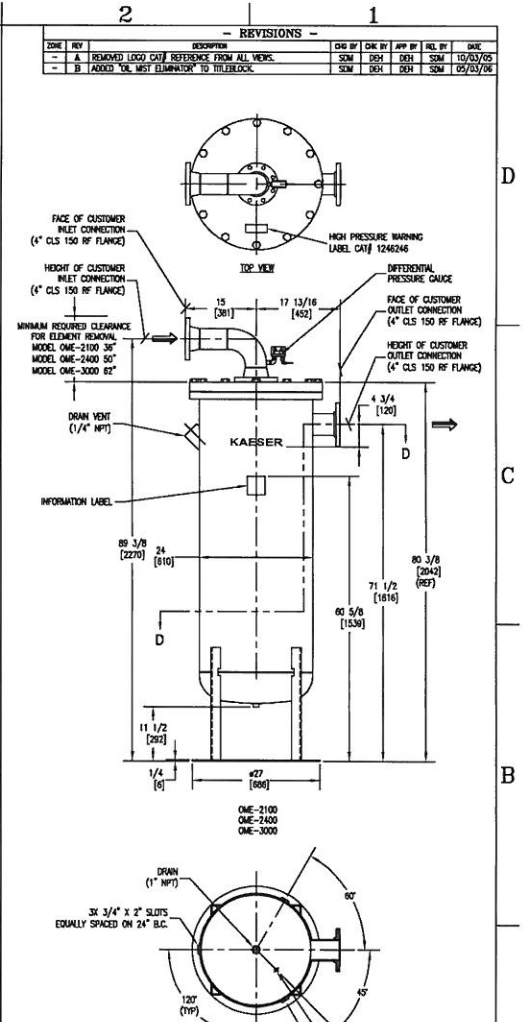

MODEL	CAPACITIES									APPROX. SHIPPING WEIGHT	REPLACEMENT ELEMENT
	70 PSIG	80 PSIG	90 PSIG	100 PSIG	110 PSIG	120 PSIG	130 PSIG	150 PSIG			
OME-125	92	103	114	125	136	147	158	179		225 LBS	4001416
OME-250	185	206	228	250	272	294	315	359		225 LBS	4001417
OME-500	369	413	456	500	544	587	631	718		250 LBS	4001418
OME-1100	812	908	1004	1100	1196	1292	1388	1580		375 LBS	4001419
OME-1500	1106	1238	1369	1500	1631	1762	1892	2154		525 LBS	4001421
OME-2100	1551	1734	1917	2100	2283	2466	2649	3015		750 LBS	4001422
OME-2400	1772	1982	2191	2400	2609	2818	3028	3446		850 LBS	4001423
OME-3000	2215	2477	2738	3000	3262	3523	3785	4308		850 LBS	4001424

NOTES:
1. THIS DRAWING, PROVIDES INSTALLATION, MOUNTING, AND CONNECTION REQUIREMENTS.
2. PRESSURE VESSELS ARE DESIGNED AND BUILT IN ACCORDANCE WITH THE CURRENT CODE AND ADDENDA OF SECTION VIII, DIV. I, OF THE A.S.M.E. CODE FOR UNFIRED PRESSURE VESSELS.
3. ANCHOR BOLTS ARE TO PROJECT A MINIMUM OF 2" ABOVE THE FOUNDATION. ANCHOR BOLTS SHOULD BE INSTALLED IN SLEEVES TO ALLOW SOME ADJUSTMENT AT TIME OF INSTALLATION.
4. FOR MAINTENANCE PURPOSES, RECOMMENDED CLEARANCE AROUND DEMISTER IS 4 FEET [1220 MM].
5. ALL CONNECTION FLANGES BOLT HOLES TO STRADDLE CENTERLINES.

ELEMENT CONSTRUCTION:
1. CARBON STEEL, SPECIAL GLASS FIBER PACKAGING.

VESSEL CONSTRUCTION:
1. CARBON STEEL, DESIGN PRESSURE 150 PSIG, DESIGN TEMPERATURE: 150°F MADE AND STAMPED IN ACCORDANCE WITH A.S.M.E. CODE, SECTION VIII.

MANUAL#: 3151879

- REVISIONS -

ZONE	REV	DESCRIPTION	CHG BY	CHK BY	APP BY	REL BY	DATE
–	A	REMOVED LOGO CAT# REFERENCE FROM ALL VIEWS.	SDM	DEH	DEH	SDM	10/03/05
–	B	ADDED "OIL MIST ELIMINATOR" TO TITLEBLOCK.	SDM	DEH	DEH	SDM	05/03/06

UNLESS OTHERWISE SPECIFIED:
DIMENSIONS ARE IN: INCHES
SURFACE FINISH: N/A
TOL. MM INCHES
.X
.XX
.XXX
FRACT: ±1/2 ANG: ±2°
SCALE: 5/64 WT: N/A

	NAME	DATE
DWN BY	DBR	07/27/04
ENG BY	DBR	07/27/04
CHK BY	DBR	07/27/04
APP BY	DBR	07/27/04
REL BY	SDM	07/27/04
CAT NO.		
ID NO.	97226	

UNAUTHORIZED USE, MANUFACTURE, OR REPRODUCTION IN WHOLE OR IN PART IS PROHIBITED. DRAWING DESIGN AND OTHER DISCLOSURES ARE PROPERTY OF:

KAESER

* DO NOT SCALE. USE DIMENSIONS ONLY *

GENERAL ARRANGEMENT

OIL MIST ELIMINATOR MODELS 125 THRU 3000

SIZE D | DWG NO. 0029000-5 | REV B | SHEET 1/1